Circuit Schematics for v10 kits

© HiViz.com 2010
all rights reserved

SK2 (upper) and TPG (lower)

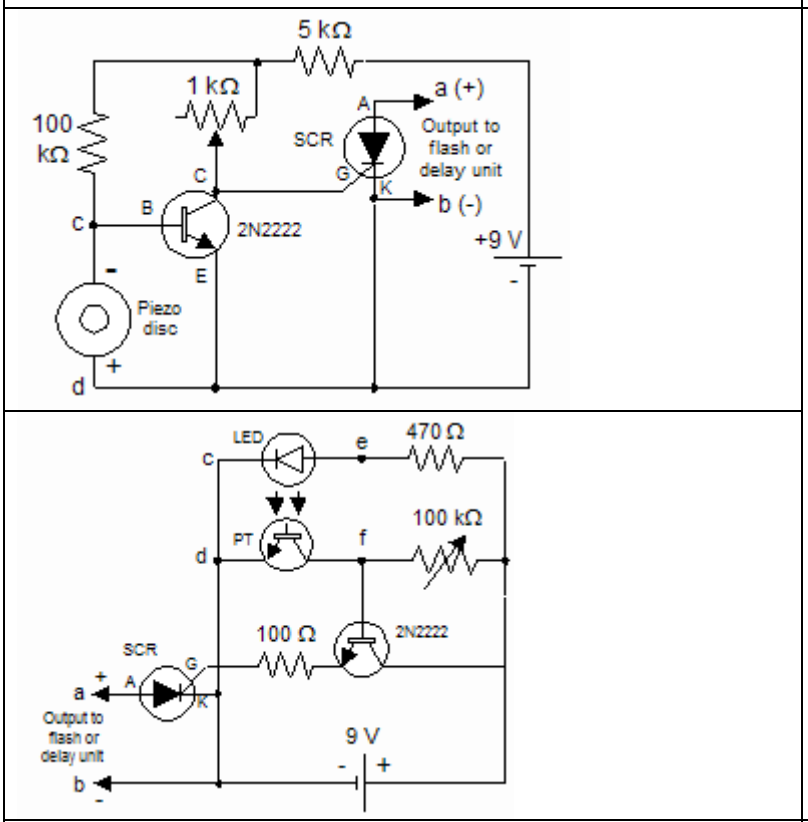

SPG1/SPG2

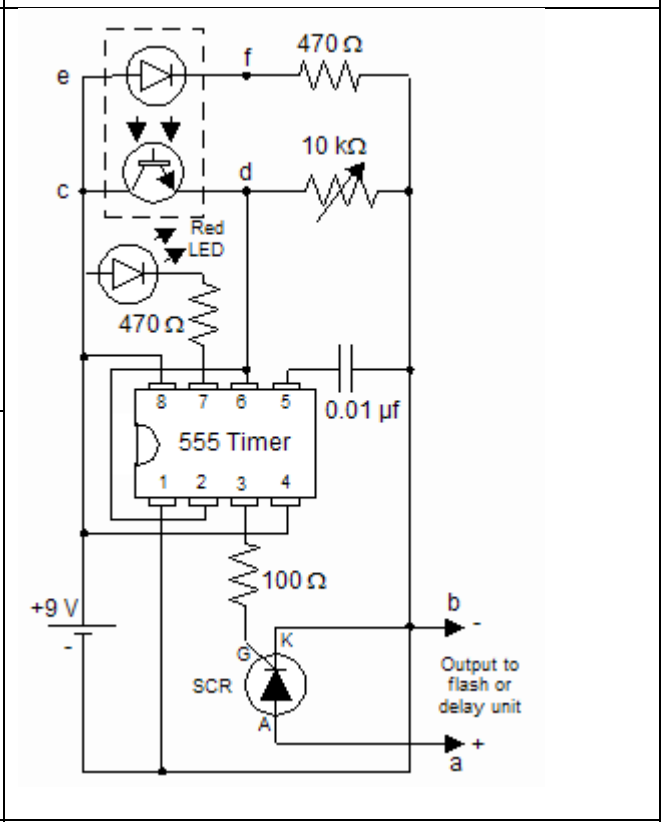

DU

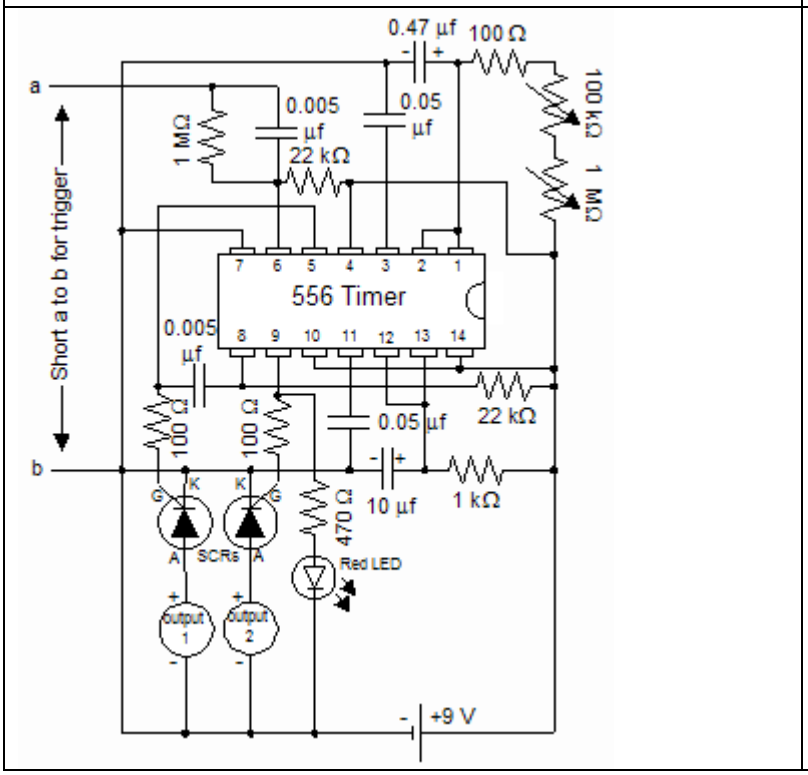
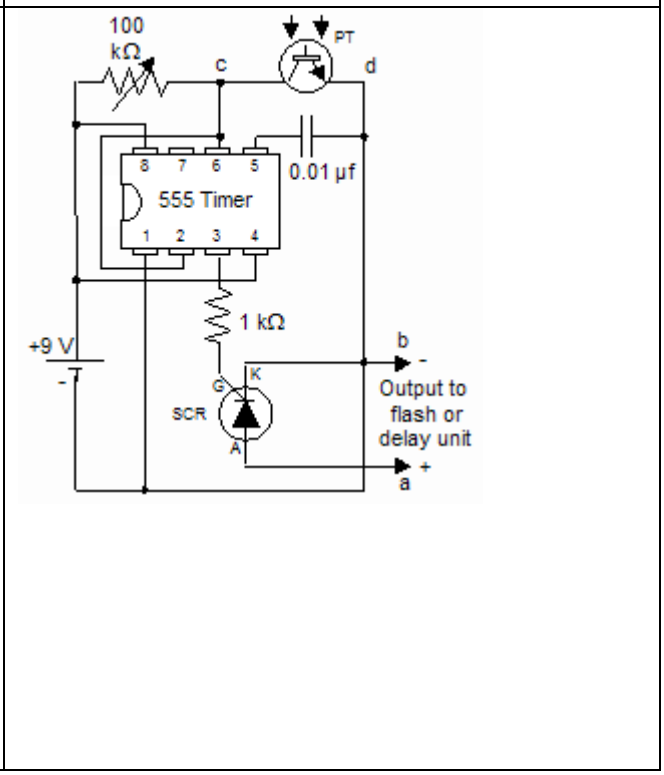
LAT